Technical data

- Nominal torque: 1 Nm to 100 Nm, bidirectional
- Rotational speed: ≤ 10.000 rpm
- Accuracy: ≤ ±0,5 %
- Temperature range: -30 °C to +85 °C
- Protection class: IP50, IP65
- Output signals: 0-10 V/4-20 mA/CAN-Bus/USB
- Output frequency: 1.000 Hz

Your advantages

- Made in Germany (Munich, Bavaria)
- Delivery ex warehouse (< two weeks)
- Best price-performance ratio
- Integrated electronic (Plug & Play)
- Contactless measurement system
- Including 5 m cable and calibration certificate

Short description

The 2300 series is the most cost-effective entry into professional torque measurement technology.

This series is mainly used in automotive test facilities, professional testing construction, climatic exposure test cabinets (exceeding dew point), process monitoring and medical engineering.

Transmitted torque can be measured statically and dynamically in real time. Shaft is available as Round shaft and Square shaft. Each sensor can be configured individually with a lot of extras, such as angle sensor and protection class IP65.

Series 2300 offers a wide range of output signals such as 0-10 V, 4-20 mA, CAN-Bus or USB. USB is offered including a special NCTE software enables to show data in real time.

The sensor is provided as a complete unit with integrated evaluation electronic, including 5 m cable, keystones (Round shaft) and calibration certificate.

Model series 2300

Model series 2300 round shaft	Unit	Nominal torque bidirectional (+/-)	Load bidirectional (+/-) in %			Rotational speed [rpm]
			100 - 130	130 - 200	> 200	
Ø 8 mm	[Nm]	1	In specification	Set up opposite directional torque or recalibration by NCTE	To recalibration by NCTE	10.000
Ø 9 mm		2,5				
		5				
		10				
		20				
Ø 15 mm		50				
		100				

Model series 2300 square shaft	Unit	Nominal torque bidirectional (+/-)	Load bidirectional (+/-) in %			Rotational speed [rpm]
			100 - 130	130 - 200	> 200	
¼ inch	[Nm]	2,5	In specification	Set up opposite directional torque or recalibration by NCTE	To recalibration by NCTE	5.000[1]
		5				
		10				
		20				
⅜ inch		50				
		100				

In case of an overload situation of the nominal torque it is possible to get the sensor back in specification. To do so please set up the same overload situation in the opposite direction. This means in case of an overload situation by 150 % positive load you can get the sensor back in specification by setting up a negative overload of 150 %.

NCTE is able to recalibrate any sensor until ultimate torque.

[1] Bei spielfreier Adaption ist eine höhere Drehzahl möglich.

Load characteristics

Model series 2300 measuring range	Unit	Axial force [N][2]	Lateral limit force [N]	Bending limit moment [Nm]
1	[Nm]	500	8	1
2,5 and 5		1.000	20	2,5
10 and 20		1.000	30	12,5
50 and 100		1.000	100	41,7

Each type of irregular stress can only be permitted with its given limit value (bending moment, lateral force or axial force, exceeding the nominal torque) if none of the others can occur. Otherwise the permitted limits must be reduced. If for instance 30 % of the limited bending moment and also 30 % of the limited lateral force are present, only 40 % of the limited axial force are permitted, provided that the nominal torque is not exceeded.

Technical characteristics

No.	Model		Series 2300	
	Accuracy class[3]		0,5	
		Unit	Value	
1	Linearity deviation incl. hysteresis	%ME[4]	< ±0,5	
2	Rotational Signal Uniformity (RSU)		< ±0,5	
3	Repeatability		< ±0,05	
	Output signal in general	**Unit**	**Value**	
4	Frequency range, -3dB point, Bessel characteristics	Hz	1.000	
	Digital output; CAN-Bus		10 (max. 1.000)[5]	
5	Analog signal	V | mA	0 … 10	4 … 20
6	Signal at torque = Zero[6]	V | mA	5	12
7	Signal at positive nominal torque[5]	V | mA	9	19
8	Signal at negative nominal torque[5]	V | mA	1	5
9	Calibration parameter (normed)[5]	V/Nm mA/Nm	4 V/Measurement range	8 mA/Measurement range
10	Error output	V | mA	10	22
11	Output resistance	Ω	< 1	

[2] Direct acting axial force on the shaft. If the force affects the snap ring, just 50 % of the force is permitted.
[3] The accuracy class implies that taken separately both the linearity deviation as well as the rotational signal uniformity are either lower than or equal to the value of the accuracy class.
[4] %ME: related to a full scale measurement range.
[5] Individual changes possible. Can-Bus up to 1.000 Hz.
[6] Please check the exact data at the sensors calibration certificate.

	Effect of temperature	Unit	Value
12	Zero point drift over temperature	%/10 K	< 0,1
13	Signal drift over temperature within nominal temperature range	%/10 K	< 0,1
	Power supply	**Unit**	**Value**
14	Supply voltage	VDC	5 … 28
15	Current consumption (max.)	mA	37 … 45
16	Start-up peak	mA	< 100
17	Absolute max. supply voltage	VDC	30
	General information	**Unit**	**Value**
18	Protection class according to EN 60529[7]	IP	50/65
19	Reference temperature	°C	+15 … +35
20	Operational temperature range	°C	-30 … +85
21	Storage temperature range	°C	-30 … +85
22	Bearing operating hours	h	approx. 20.000

	Nominal rated torque M (bi-directional)		Nm	1	2,5	5	10	20	50	100
23	Weight	Rd	g	391	380		390		550	
		Sq		-	370		380		510	
24	Moment of inertia	Rd	g mm^2	270	546		698		4.535	
		Sq		-	318		470		2.951	

[7] Wiring connected.

Dimensions

Series 2300 1 Nm

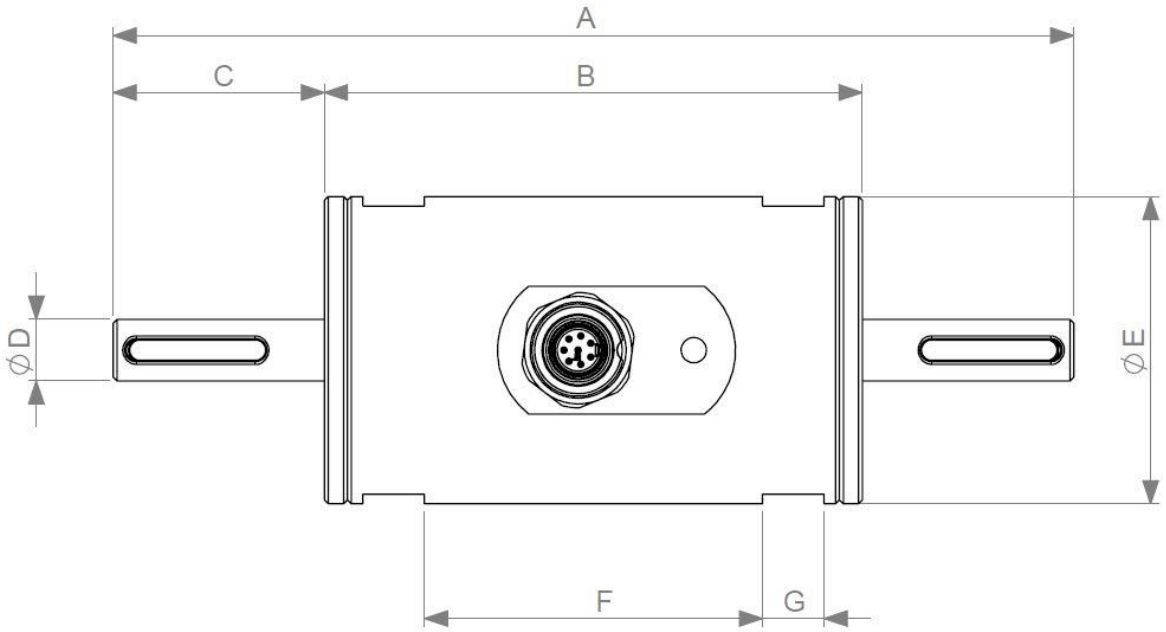

Series 2300 ≥ 2,5 Nm

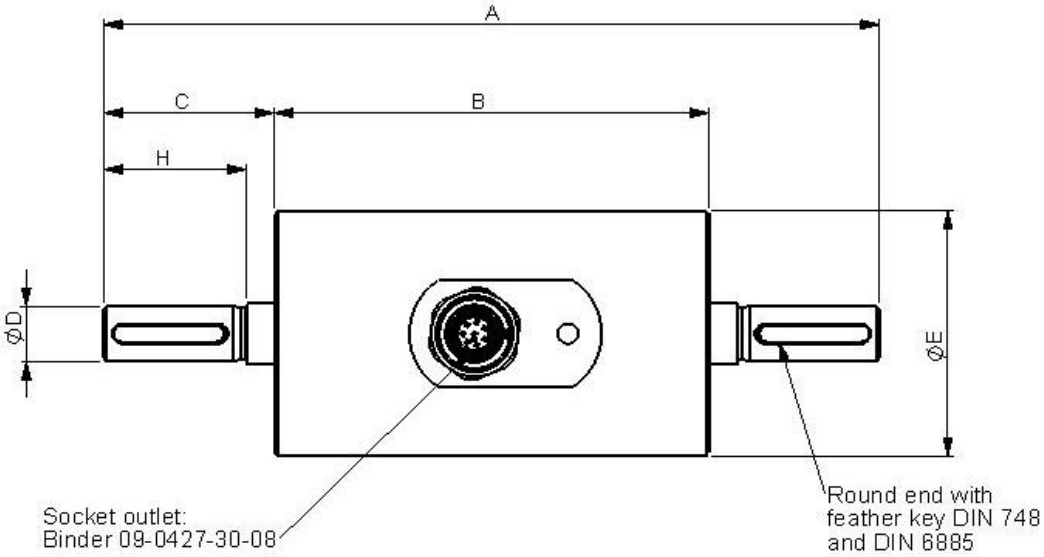

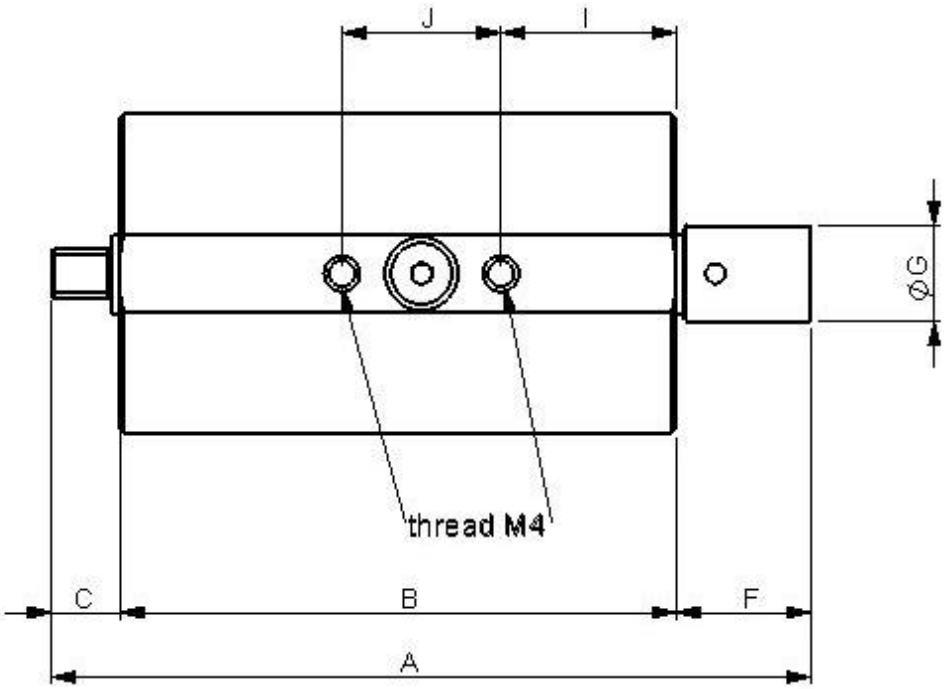

Dimensions	Round shaft nominal torque [Nm]			Square shaft nominal torque [Nm]	
	Ø 8 mm	Ø 9 mm	Ø 15 mm	1/4 inch	3/8 inch
Nominal torque [Nm]	1	2,5 - 5 - 10 - 20	50 - 100	2,5 - 5 - 10 - 20	50 - 100
A	125	125	139	95,5	107
B	70	70	70	70	70
C	27,5	27,5	35	8,5	12
D	8g6	9g6	15g6	-	-
E	40	40	50	40	50
F	44	-	-	16	24
G	8	-	-	12	18
H	-	23	-	-	-
I	-	22	22	22	22
J	-	20	20	20	20

Dimensions keyway [mm]				Keystones		
Round shaft	Width	Depth	Length	Height	Length	Amount
Ø 8 mm	3	1,3	18,5	3	18	1
Ø 9 mm	3	1,8	18,5	3	18	1
Ø 15 mm	5	3	25,5	5	25	1

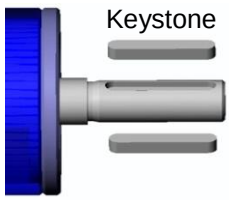

Connection plan

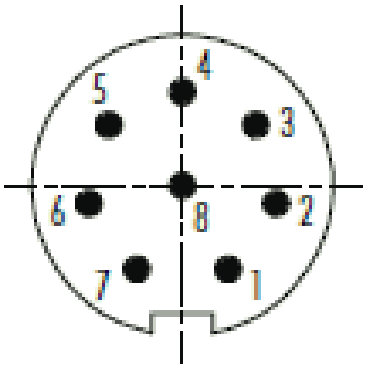

Connector
Power supply and outputs

Typ	Binder series s712-M9 connector IP67 colour coding according to DIN 47100		
Pin	**Color**	**Description**	**Value**
1	White	USB/CAN-Bus	D-/H
2	Brown	USB/CAN-Bus	D+/L
3	Green	Angle Channel A	0 V … 5 V
4	Yellow	Angle Channel B	0 V … 5 V
5	Grey	Analog GND	-
6	Pink	Signal Output analog Voltage/Current	0 V … 10 V 4 mA … 20 mA
7	Blue	Ground GND	-
8	Red	Ground V_{CC}	5 V … 28 V

Connection example:

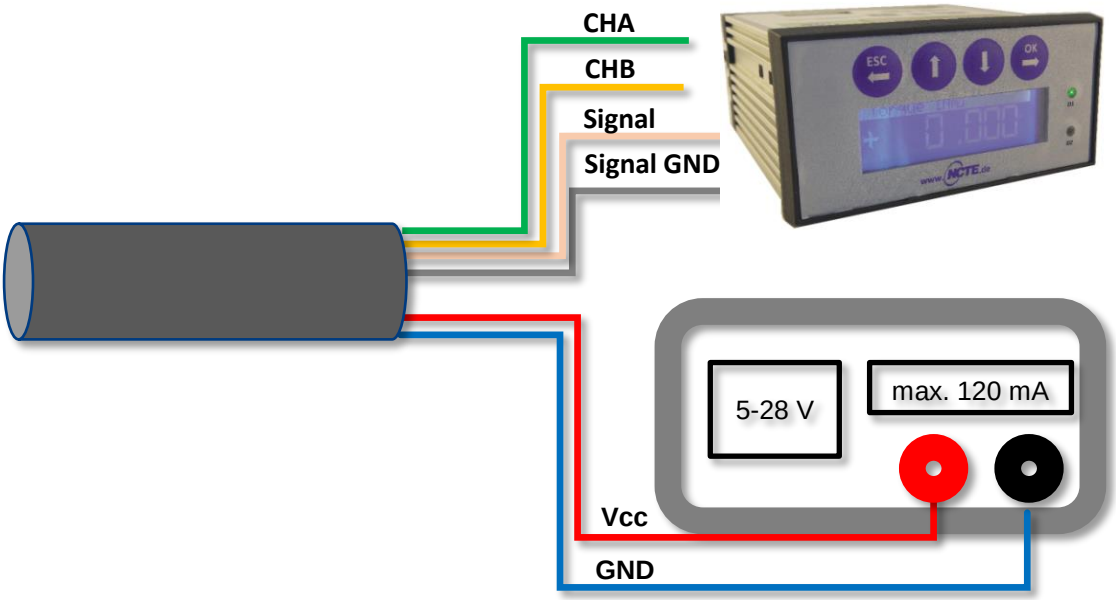

Angle sensor

Optical angle sensor with 360 CPR.

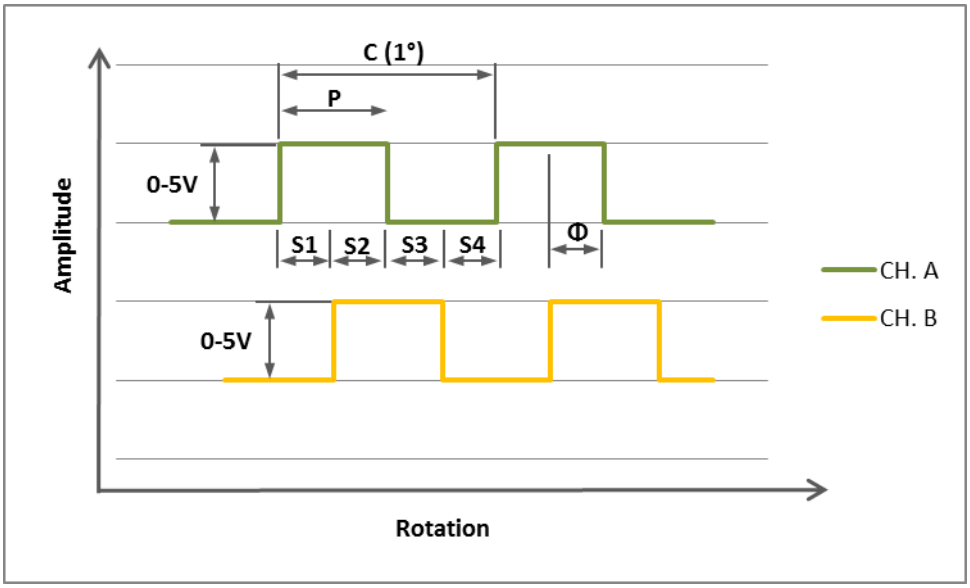

Parameter	Min.	Typ.	Max.	Units
High Level Output Voltage	2,4	5	-	V
Low Level Output Voltage	0	-	0,4	V

Parameter	Description
C	One cycle of 360 CPR (degrees)
P	The duration of high state of the output within one cycle.
S	The number of electrical degress between a transition in Channel A and the neighboring transition in Channel B.
Φ	The number of electrical degrees between the center of high state of Channel A and the Center of high state of Channel B.

Order options

Series 2300 accuracy 0,5 %							Price
	Measurement range						
	1	Nm including 5 m cable and calibration certificate without sensor bracket					
	2,5	Nm including 5 m cable and calibration certificate					
	5	Nm including 5 m cable and calibration certificate					
	10	Nm including 5 m cable and calibration certificate					
	20	Nm including 5 m cable and calibration certificate					
	50	Nm including 5 m cable and calibration certificate					
	100	Nm including 5 m cable and calibration certificate					
		Angle sensor					
		0	Without angle sensor				
		1	Angle sensor 360CPR				
			Analog output				
			A	Voltage output 0-10 V			
			S	Current output 4-20 mA			
				Digital output (optional)			
				U	USB incl. NCTE Software and 2,8 m cable		
				C	CAN-Bus		
					Shaft ends		
					0	Round shaft with keystone	
					1	Square shaft (not as 1 Nm Sensor available)	
						Protection class according to EN 60529	
						0	IP50
						1	IP65 (not as 1 Nm Sensor available)
2300							

Please feel free to contact your Sales Manager Serial products for additional information. Email: sales@ncte.de or Phone: +49 89 66 56 19 17

By **Series 2300 1 Nm** measurement range please keep in mind to order it with sensor bracket (order no.: 400006-ATS100/Price 115 €) as the housing has no treats.

Accessories			Price
Sensor bracket			
1	Serie 2300 1 Nm (Art. Nr 400006-ATS100)		
	NCTE Readout Unit works with all NCTE Sensors		
	A	**Torque sensor input: Voltage output 0-5 V and 0-10 V** Order number: 400010-ATS001 1 angle encoder input, A/B USB interface, Windows software included SD card slot	
	S	**Torque sensor input: current output 4-20 mA** Order number: 400010-ATS002 1 angle encoder input, A/B USB interface, Windows software included SD card slot	
		Coupling	
		X	Customized couplings, price on request

Please feel free to contact your Sales Manager Serial products for additional information. Email: sales@ncte.de or Phone: +49 89 66 56 19 17.

Instruction manual

Scope of delivery

The torque sensor set consists of the sensor itself (signal pick-up and signal processing integrated into sensor housing), one **connecting cable** 5 m with a **soldered plug** (binder plug no. 99-0426-10-08), **key stones** (round shaft) and the calibration certificate.

USB-cable will be delivered in 2,80 m length.

Datasheets and instruction manuals are available at www.ncte.com.

Installation and removal

Make sure to install the sensor shafts exactly with the proper aligned connecting shafts. The key stone adapter/square endings of the connecting shafts are to be attached forceless to the corresponding ones of the sensor. No external axial force should be on the housing of the sensor from distortion. A maximum cable length of 5 m must not to be exceeded. Using a cable or connector other than supplied by **NCTE**, or a similar cable that is of a different length may affect the overall performance of the sensor.

Do not remove the shaft with torque applied to the sensor.

Interface description

Mechanical connection:
The key stone adapters on both ends of the measurement shaft are intended for torque transmission.

Electrical connector:
On the sensor housing there is a 8-pin socket for the power supply and the signal output (see chapter connection plan).

Operation (in regular case or in optimal case)

Optimal measurement parameters can be achieved if the sensor is applied in accordance to the specification. By compliance with the specification the sensor works generally trouble-free and maintenance-free.

Irregular operation, measures against disturbance

The mechanical overload on the sensor (e. g. exceeding of maximum allowed torque or severe vibrations) may cause damage to the sensor and in consequence the incorrect signal output. In such cases please do not open the sensor. Contact **NCTE** directly for assistance.

Commissioning

After sensor installation pay attention to the following:

- The sensor may only be operated with a shielding.
- Switch on the power supply unit and check the supply voltage. Peak voltage must be avoided! Be sure to verify the power supply voltage before connecting the sensor!
- Connect the sensor to the power supply unit by using the delivered cable.
- Connect the sensor output to a high-resistance device such as an A/D converter, oscilloscope, PC measurement board. The sensor should be in mechanical unloaded state while connecting it.

Shaft coating

The shafts are protected on both sides with a film of anticorrosion wax. We recommend to leave the protection permanent. As far as technologically needed, the coating can be removed with spirit / ethanol

Handling and transportation

By handling, storage and transportation keep the sensor away from magnetic or electromagnetic fields which may exceed the maximal intensity defined from EMC (chapter technical characteristics) for instance degaussing machines.

Precautions

- Do not open the sensor housing under any circumstances.
- Do not remove or loosen the locking rings on the shaft ends.
- Do not loosen or tighten the flange-mounting nut of the socket-connector (chapter dimensions).
- Use only a separate power supply for the sensor.
- Use the sensor only according to the specification (chapter technical characteristics).

Maintenance and overhaul

As part of your testing and measuring equipment management, we recommend regular checking of your testing and measuring equipment. Please also observe the corresponding standards and guidelines.

Recommended NCTE maintenance plan	
Recalibration	12 month
Control of wiring, plug and shaft	12 month

Repairs

Repairs must be carried out exclusively by employees of NCTE AG. The sensor must be sent to the NCTE AG together with an RMA formula (Return Merchandise Authorization). You will receive an RMA formula via the NCTE service-hotline.

Disposal

For disposal the Sensor has to be returned to **NCTE AG, Raiffeisenallee 3, 82041 Oberhaching, Germany.**

Service-Hotline

Phone: +49 89 66 56 19 17 Fax: +49 89 66 56 19 29
Email: sales@ncte.de

Sales rep.:
SENSORS®
Sensors AS
Setersletta 3
NO-2006 LØVENSTAD
+47 67 90 43 00
post@sensors.no
www.sensors.no